INSTALLATION, COMMISSIONING AND SERVICING INSTRUCTIONS

BRINK

"B" SERIES OPEN FLUED WARM AIR HEATERS

CE

STORE NEAR HEATER

Installer : .....

Address : .....

Place : .....

Telephone : ..... Date : .....

Distributed by: **J O H N S O N and S T A R L E Y. Ltd**

Rhosili Road,

Brackmills,

Northampton NN4 7LZ.

Telephone: 01604 762881

Telefax: 01604 767408

E-mail: spares@johnsonandstarley.co.uk

"B" SERIES WARM AIR HEATERS

Installation, Commissioning and Servicing Instructions

Publication No. ZZ594/10 August 2000
G.C.No.s: B12 - 42 416 95
B17 - 42 416 96
B23 - 42 416 97
B28 - 42 416 98
B34 - 42 451 01

WARNING: THESE APPLIANCES MUST BE EARTHED

1. GENERAL DESCRIPTION

The Johnson & Starley 'B' Series heaters are open-flued, fan assisted, ducted warm air heaters, which can be supplied for either upward discharge (upflow) or downward discharge (downflow) applications.
Air heater outputs range from 12.0 kW(43.2 MJ/h, 40,940 Btu/h) to 36.0 kW(129.6 MJ/h, 122,830 Btu/h).

2. COMPONENTS CHECK

1	*Flue outlet*
2	*Draught diverter*
3	*Combined fan and limit switch*
4	*Multifunctional control*
5	*Pilot burner assembly*
6	*Mains electrical connection*
7	*Summer air circulation switch*
8	*Air circulating fan*
9	*Air filter*
10	*Control Panel*
11	*Auto transformer*
12	*Main burner assembly*
13	*Data badge*
14	*Gas connection 1/2in BSP*
15	*240V/24V transformer*
16	*Piezo unit*
17	*Spillage switch*

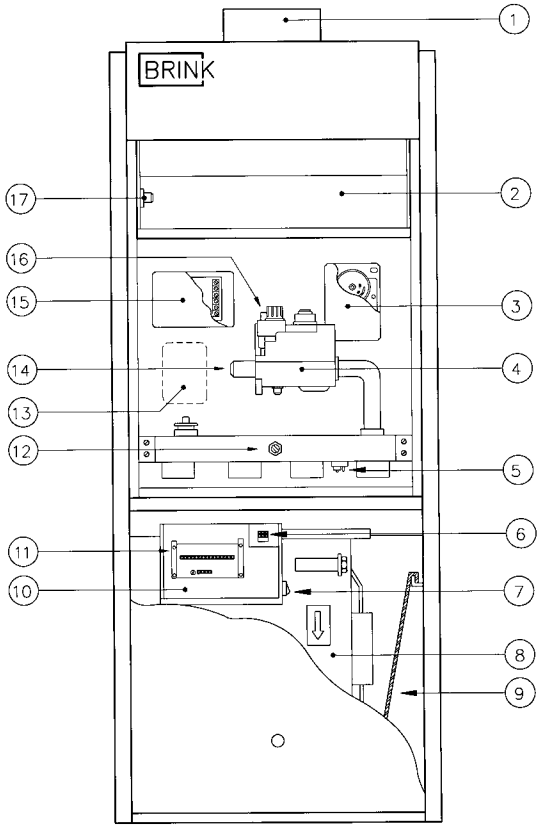

Fig.1

3809.tif

Item supplied loose (not shown): Gas service cock ½"BSP

NOTE: Fig.1 shows the component layout for an Upflow model. For 'D' type (Downflow) models, the component layout is similar (burner and fan chambers are reversed), with the exception of the air filter (see Section 8, para. 8.7.2).

THESE APPLIANCES CONFORM TO BS 800

3. GENERAL REQUIREMENTS

3.1 Related Documents (refer to latest issues)

This appliance MUST BE installed in accordance with the relevant requirements of the Gas Safety (Installation and Use) Regulations, the Building Regulations and the I.E.E. Wiring Regulations for electrical installations.

It should be in accordance also with any relevant requirements of the local Region of British Gas and Local Authority and the relevant recommendations of the following Codes of Practice:-

- Building Standards (Scotland)(Consolidation) Regulations.
- Building Regulations.
- Gas Safety (Installation and Use) Regulations (as amended).
- Institute of Electrical Engineers (I.E.E.) Regulations.
- BS6891 Specification for Installation of Low Pressure Gas
- Pipework of up to 28mm (R1) in Domestic Premises (2nd family gases).
- BS5440 Pt.1 (Flues for Gas Appliances).
- BS5440 Pt.2 (Air Supply for Gas Appliances).
- BS5864 Installation of Gas Fired Ducted Air Heaters.
- British System Design Manual 'Gas Fired Warm Air Heating'.
- Local Authority Bylaws.

IMPORTANT: **It is the law that all gas appliances are installed by competent persons e.g. Corgidealers, in accordance with the Gas Safety (Installation and Use) Regulations (current edition).**
Failure to install appliances correctly could lead to prosecution.

4. INSTALLATION

4.1 Heater Compartment and Clearances (see BS5864)

When the heater is fitted into a compartment, the following minimum clearances are needed (all heaters):-

Front: 150 mm (6in)
Sides: 50 mm (2in)
Rear : 50 mm (2in)

For service access, a minimum front clearance of 600mm(24in) is needed.
Consideration should also be given to the space required for the removal and replacement of the filter, entry of gas and electrical supplies, and in compartment installations, to the removal of the heater.

The compartment must be of a fixed rigid structure and the internal construction must be half-hour-fire-resistant from internal fire; the inside lining or finishing of the enclosure must be non-combustible or a class 1 finish - see also BS476.

In airing cupboard installations, the part used as the air heater compartment must comply with the relevant sections of BS5864 and must be completely separated by either a non-combustible partition or a perforated metal partition with the perforations not exceeding 13mm(½in).
The secondary flue must be a tight fit where it passes through the partition and must be suitably protected (see BS5440: Part 1).

In under-stairs installations, the compartment must comply with the relevant section of BS5864, provided that, in addition, all internal surfaces including the base, are non-combustible or lined with non-combustible material.

4.2 Ventilation and Combustion Air

The room or internal space in which the heater is installed requires a permanent air vent. The air vent should be either direct to outside air or to an adjacent room or internal space (other than a toilet or bathroom) that itself has an equivalent air vent to outside.

Minimum effective areas of permanent air vent:-

B-12(D)	-	45 cm²	(7 in²)
B-17(D)	-	81 cm²	(13 in²)
B-23(D)	-	117 cm²	(18 in²)
B-28(D)	-	153 cm²	(24 in²)
B-34(D)	-	185 cm²	(29 in²)

Combustion air may be introduced, if required, via a dampered pipe, connected to a ventilated area.

The damper should be adjusted to control combustion air flow to the following flow rates:-

Heater Type	Pipe Dia. mm (in)	Flow rate m^3/s (cfm)	Velocity m/s (ft/min)
B-12 (D)	100	0.009 (17.9)	1.15 (205)
B-17 (D)	125	0.015 (29.9)	1.22 (219)
B-23 (D)	125	0.018 (36.2)	1.48 (265)
B-28 (D)	125	0.023 (45.1)	1.85 (331)
B-34 (D)	150	0.027 (54.2)	1.53 (276)

If this arrangement is used, a non-closable warm air register MUST be provided in the same area as the front of the air heater or heater compartment if a return air grille is not located in that area.

When installed in a compartment, two permanent ventilation openings are required, one at high level and one at low level, both communicating on the same wall or face either directly with outside air or with a ventilated room or space.
The minimum areas are specified in TABLE 1.

If any room or area from which air is drawn for ventilation or combustion contains an extract fan, the permanent vents must be sized to ensure that the operation of the appliance(s) at full rate is/are not adversely affected.
A spillage test as specified in Section 5.16 should be carried out and any remedial work undertaken.

TABLE 1

		B-12 (D)	B-17 (D)	B-23 (D)	B-28 (D)	B-34 (D)
Ventilated from inside building	Low level grille	306 cm² (47 in²)	450 cm² (70 in²)	594 cm² (92 in²)	738 cm² (114 in²)	864 cm² (134 in²)
	High level grille	153 cm² (24 in²)	225 cm² (35 in²)	297 cm² (46 in²)	369 cm² (57 in²)	432 cm² (67 in²)
Ventilated from outside building	Low level grille	153 cm² (24 in²)	225 cm² (35 in²)	297 cm² (46 in²)	369 cm² (57 in²)	432 cm² (67 in²)
	High level grille	77 cm² (12 in²)	113 cm² (18 in²)	149 cm² (23 in²)	185 cm² (29 in²)	216 cm² (33 in²)

4.3 Duct System

Refer to British Design Manual - Gas Fired Warm Air Heating.

4.4 Return Air

All return air must be POSITIVELY ducted from outside the compartment to the unit.
It is recommended that the return air duct is not ducted directly from the main living area, but from a convenient central area serving the remainder of the dwelling.

4.4.1 Downflow models:
Connect ONLY to the top of the heater.

4.4.2 Upflow models:
Connect to the base or to either side of the heater.
It will be necessary to cut a hole in either the base or one of the side panels.
Refer to Fig.6 for details.
The return air system should be constructed of fire-resistant material. The flue must not run through an area serving as a return air path.
It is extremely important that the correct size of return air grilles and ducting is used.
For heaters on maximum output, the return air duct size should be sufficient to ensure that the air velocity in the duct does not exceed 4 m/s (800 ft/min).
Free area of the return air grille(s) should be such that the velocity of air through the grille(s) does not exceed 2 m/s (400 ft/min). An adequate and unobstructed return air path is essential from areas not served by a directly ducted return, and to which warm air is delivered. All such rooms should be fitted with relief grilles which have a free area of 0.0088 m^2/kW (1 in^2/250 Btu/h) of heat supplied to the room.
The only exceptions are kitchens, bathrooms and w.c's.
All ductwork in the room or internal space in which the heater is installed must be secured mechanically, and sealed with ducting tape.

4.5 Warm Delivered Air
All ductwork, including riser ducts, should be fully insulated with 50 mm (2 in) glass fibre or similar. If short extended duct runs are taken below floor level these should be similarly insulated, and in addition wrapped with a sound vapour-proof barrier, and protected from crushing.
The duct system should be carefully designed (as given in the guidelines in the British System Design Manual) to suit the needs of its specific heating requirements and building layout.
The type of duct system, ie. radial/extended plenum/stepped should be installed using the least number of fittings to minimise air flow resistance.
The warm air plenum, which equalises the air pressure to the supply ducts, must be constructed to support the weight of the heater, which must be secured to the plenum with screws on at least two sides, and sealed using self-adhesive foam strip, ducting tape or sealing compound.

4.6 Gas (see BS5864, Clause 12 and BS6891)
An independent gas supply line from the meter is to be preferred wherever possible. However, when this is not possible, the line must be capable of taking the complete input of the heater and all other gas appliances being served by this same line.
This supply should be suitably sized to conform to British Standards requirements of no more than 1.0 mbar (0.4 in wg) pressure drop (see table of discharge in BS6891).
The union gas cock (supplied) must be fitted in the gas inlet of the heater for easy isolation during servicing.
The gas pipe should be so fitted and installed as to be durable, substantial and gas tight. Gas entry to the air heater is through either side to a Rc½ (½in BSP) external (taper) thread.
NOTE: When entry is from the right-hand side, ensure that the route of the gas feed pipe does not obstruct removal of the burner assembly for servicing.

4.7 Electrical Supply
All wiring external to the appliance must be installed in accordance with Institution of Electrical Engineers (I.E.E.) Regulations for electrical installations, and any other local regulations which apply.
Connect mains electrical supply to the terminal block provided (item 6, Fig.1).

4.8 Flues (see British Standard BS5440 Pt.1 Flues)

4.8.1 All joints shall be soundly sealed.

4.8.2 The flue should be kept as short and warm as possible.

4.8.3 Sufficient support brackets shall be installed to bear the weight of the total flue system.

4.8.4 The spigot connection of the heater draught diverter will accept internally the spigot end of a non-asbestos flue to BS567 or twin wall metal flue to BS715 of nominal 100mm (4in) diameter for B12 appliances, 125mm (5 in) nominal diameter for B17 and B23 appliances and 150 mm (6in) for B28 and B34 appliances. (Note: The B17 upflow flue pipe may be 100mm if the initial vertical length is 1 meter or more)

4.8.5 A split collar should be fitted to provide for flue maintenance or inspection.

4.8.6 The flue shall be in accordance with the Building Regulations with regard to clearance and shielding from combustible materials.

4.8.7 All materials shall be in accordance with Building Regulations requirements.

4.8.8 The flue should run as vertically as possible. Horizontal runs should be avoided if at all possible and any directional change should be as gentle as possible. If there is any doubt about the flue configuration, the equivalent flue height should be determined (see 4.8.10)

4.8.9 If the appliance to be fitted is a replacement, the old appliance should be checked for signs of spillage prior to commencement of the installation and appropriate action taken. i.e. check flue system and renew as necessary.

4.8.10 It is recommended that at least 600mm of vertical flue should be provided from the top of the draught diverter (for new installations this shall be incorporated into the flue design). However, when carrying out replacement installations, an existing flue system may be encountered, where the vertical flue above the draught diverter to the first bend is less than 600mm. In the first instance, the installer must judge whether this distance can be achieved practicably by some means. Where this is not practicable, the existing flue system may be used, providing there is no evidence of spillage from the old appliance (see 4.8.9 above). Every effort must be made, however, to ensure that the existing flue complies in every other way to BS 5440 Part 1, including the visual inspection, flue flow and spillage test described in 4.3.2 of the above standard. Flue configurations may be assessed in terms of equivalent vertical height - details are given in 4.8.11. For air heaters, the minimum equivalent vertical height is 1 metre. The installer must make a judgement based on his knowledge and experience and the examination and testing described above as to whether an existing flue system can be used.

Note: Ventilation of the compartment, room or internal space in which the appliance is to be installed must be checked for compliance with the requirements of BS 5440 Part 2 (Ref Section 3 of these instructions) and upgraded as necessary

4.8.11 Calculation method for flue sizing: (from BS 5440: Part 1, Appendix A)

a. This appendix provides a procedure for estimating whether a given flue design is likely to ensure full clearance of combustion products.
b. The procedure is based on calculating the ‘equivalent height’ of the flue under consideration, i.e. that height of the straight vertical circular flue pipe of specific size which will produce the same flow rate as the flue under consideration. The equivalent height is calculated from the formula overleaf :

$$H_e = H_a \times \frac{(K_i + K_o)_e}{(K_i + K_o)_a - K_e H_a + \text{Sum } K}$$

where:

H_e is the height of the equivalent flue;

H_a is the vertical height of the actual or proposed flue;

K_i is the inlet resistance of the flue;

K_o is the outlet resistance from the flue;

subscript e refers to the equivalent flue diameter;

subscript a refers to the actual or proposed flue diameter;

K_e is the resistance per unit length of the equivalent flue;

Sum K is the resistance (other than the inlet and outlet resistance) of the actual or proposed flue.

Note: K and Sum K are obtained from Table 2. Ko and Ki are obtained from Table 3.

c. Table 2 gives resistance factors for common flue components for use in the formula. Table 3 contains the appropriate inlet and outlet flue resistances.
The flue is likely to be satisfactory if its equivalent height exceeds 1m.

Component	Internal Size (mm)	Resistance Factor		Component	Internal Size (mm)	Resistance Factor
Flue Blocks	197 x 67	0.85 per meter		135° Bend	100 mm pipe	0.61 per
	231 x 65	0.65 run			125 mm pipe	0.25 fitting
	317 x 63	0.35			150 mm pipe	0.12
	140 x 102	0.60			197 x 67	0.30
	200 x 75	0.60			231 x 65	0.22
	183 x 90	0.45			317 x 63	0.13
Pipe	100	0.78		Raking block	Any	0.30 per block
	125	0.25				
	150	0.12		Adaptor block	Any	0.50
Chimney	213 x 213	0.02		Terminal	100 mm ridge	2.5
					125 mm ridge	1.0
90° Bend	100 mm pipe	1.22 per			150 mm ridge	0.48
	125 mm pipe	0.50 fitting			100 mm GCI	0.6
	150 mm pipe	0.24			125 mm GCI	0.25
					150 mm GCI	0.12

Table 2 Resistance factors for use in calculating equivalent heights

Appliance	Inlet Resistance (K_i)		Flue	Outlet Resistance (K_o)
100 mm dia spigot	2.5		100 mm flue	2.5
125 mm dia spigot	1.0		125 mm flue	1.0
150 mm dia spigot	0.48		150 mm flue	0.48

Table 3 Inlet and outlet resistance

d. **Worked Calculation Example:**

A warm air unit with a 100 mm diameter flue spigot, fitted with a pre-fabricated flue system leading to a ridge tile in the loft (refer Fig. 2):

From table 2:

K_{ia}	Inlet resistance of actual flue	= 2.5
K_{oa}	Outlet resistance of actual flue	= 2.5
K_{ie}	Inlet resistance of equivalent flue	= 2.5
K_{oe}	Outlet resistance of the actual flue	= 2.5

From table 3:

Other resistances of actual flue:

Terminal	= 2.5
Pipe bend (2 x 0.61)	= 1.22
Pipe (4 x 1m @ 0.78)	= 3.12
(5 x 0.3m @ 0.234)	= 1.17
Sum K	**= 8.01**

Equivalent height:

From the formula

$$H_e = 6.2 \times \frac{(2.5 + 2.5)}{(2.5 + 2.5) - (0.78 \times 6.2) + 8.01}$$

$H_e = 3.793$ This flue exceeds 1.0m equivalent height and is therefore satisfactory

4.8.12 Where flue blocks are used, builders should ensure that no obstruction is created during erection. The installer should ensure that the connection flue does not project beyond the internal wall of the flue blocks and that there is provision for examination and servicing.

4.8.13 Important: Before installing the appliance, carry out a visual check of the flue system as directed in the relevant section of BS5440 Pt.1, then check the flue performance as follows:-

a. Close all doors and windows in the room in which the appliance is to be installed.

b. Introduce some heat into the flue, using a blow torch or other means.

c. Carry out a flow visualisation check with a smoke pellet at the intended position for the appliance. Ensure that there is discharge of smoke from the correct terminal only, and no spillage into the room.

Smoke coming out of other than the correct terminal only, or a down draught or ‘no flow’ condition, indicates that the flue has failed the test, and the appliance shall not be connected until the defect has been found and rectified, and the test satisfactorily completed.

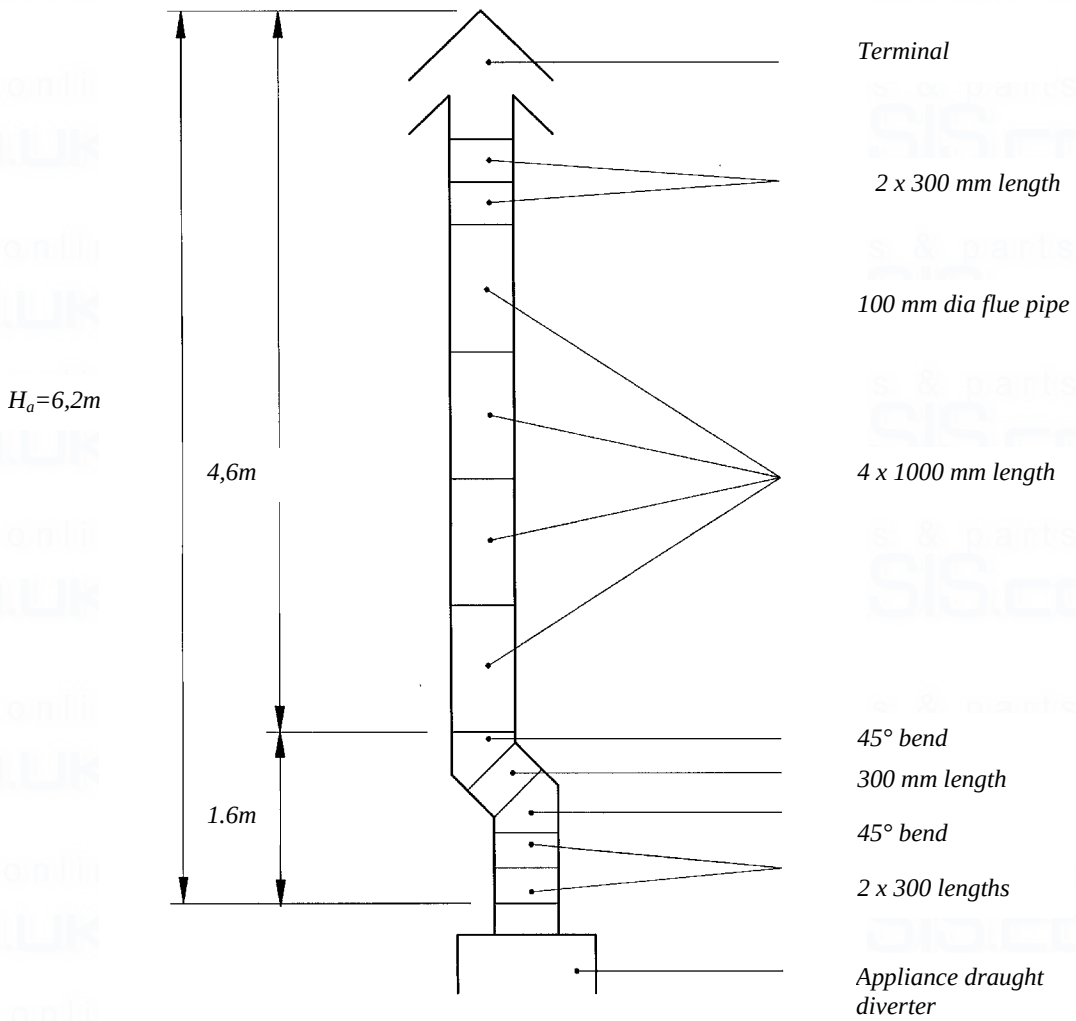

Fig. 2 Worked example of equivalent flue height

4.9 Room Thermostat (supplied)

For wiring details see Fig. 8.

An anticipator is located within the thermostat and is graded in amps. The amp reading should correspond with that indicated on the multifunctional control, i.e. 0.2A, and the anticipator should be checked and adjusted as necessary.

4.10 Room Thermostat location and connection

4.10.1 The room thermostat should be located where there is free air circulation, approximately 1.5m (5ft) from the floor.

4.10.2 Avoid the following locations:-

a) In a room where temperature is greatly affected by the sun, any other heat source e.g. radiant fire or wall light fittings.
b) Near outside doors or windows, or on outside walls.
c) Where affected by warm air ducts, diffusers, waste pipes or the heater itself.
d) Where subject to vibration.

5. COMMISSIONING

5.1 Ensure that gas and electrical supplies to the appliance are off.

5.2 Remove the large front panel from the air heater and check that the filter, fan and fan compartment are free of obstructions.

5.3 Check that all of the registers or grilles are open.

5.4 Check that the return air, relief air and ventilation air installation is adequate.

5.5 Check that the fan and limit switch settings are correct (remove the top fixing screw, if fitted, and pull off the front cover for access to the indicator pointers as shown in Fig.3).

IMPORTANT: Before making any adjustment, grip the scale plate with the finger tips to prevent strain on the sensing element, then move the indicators to the desired settings.

FAN SCALE: Fan ON 40°C
Fan OFF 30°C

LIMIT SCALE: The indicator pointer is factory set and must be as shown below for the various heater types.

MODEL	UPFLOW	DOWNFLOW
B-12 (D)	65 °C	75 °C
B-17 (D)	85 °C	120 °C
B-23 (D)	60 °C	85 °C
B-28 (D)	70 °C	80 °C
B-34 (D)	60 °C	65 °C

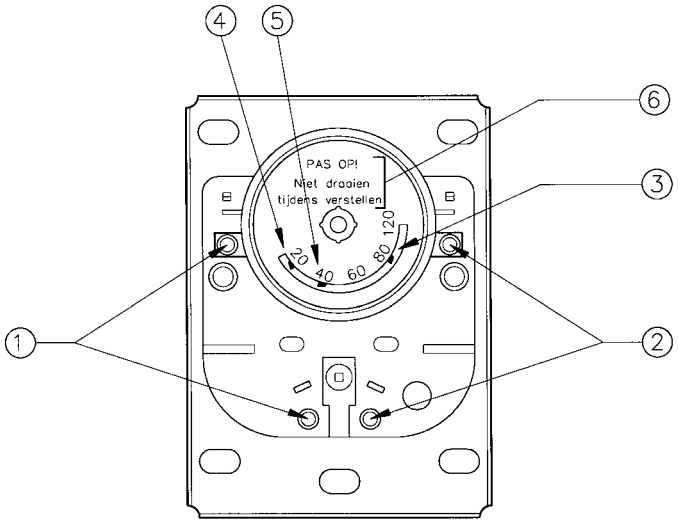

1 = fan switch
2 = overheat switch
3 = overheat range
4 = switch-off point air circulation fan
5 = switch-on point air circulation fan
6 = Caution
Do not turn during adjustment

3722.tif

Fig. 3 Combined Fan and Overheat Limit Switch

5.6 Remove the screw from the pressure test point on the multifunctional control (see Fig.4) and attach a pressure test gauge.

5.7 Turn the Room Thermostat to the lowest or OFF setting.

5.8 Turn the gas service cock ON and light the pilot burner (see Lighting Instruction Label).

WARNING: - If the pilot burner is extinguished, either intentionally or unintentionally, no attempt should be made to relight the gas until at least 3 minutes has elapsed. Ensure that the electrical supply is OFF.

5.9 Adjust the pilot flame if necessary (see Fig.4 for adjustment point).

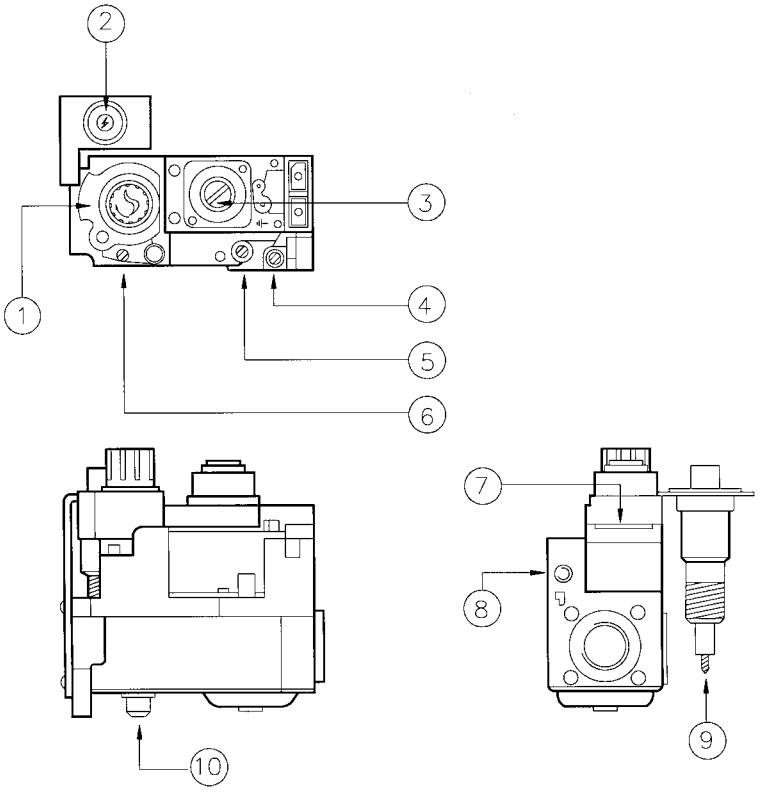

1 = start knob
2 = lighting button
3 = gas pressure adjusting point
4 = pilot flame adjusting point
5 = burner pressure test point
6 = supply pressure test point
7 = electrical connection main valve
8 = pilot burner line connection
9 = piezo unit connection
10 = thermocouple connection

3926.tif

Fig. 4 Multifunctional Control

5.10 When the pilot burner is alight, switch ON the mains electrical supply to the heater.
Set the Time Control (if supplied) to the required 'Heating On' periods and adjust the Room Thermostat to maximum; the main burner will now operate.

5.11 Test gas carrying components for gas soundness using a proprietary leak detection fluid. Seal any leaks after turning off the appliance.
Turn on the appliance and retest for soundness.

5.12 Allow the heater to operate for 15 minutes, then check and, if necessary, adjust the burner pressure to the output required (see Fig.4 for adjustment point and Table 4 for pressure settings).

5.13 To adjust the burner pressure: Remove the cover from the gas pressure adjusting point on the multifunctional control (see Fig.4), and turn the flow rate screw clockwise to increase, anti-clockwise to decrease.

5.14 Remove the pressure test gauge and replace the covers on the pilot flame and gas pressure adjustment points.

5.15 Automatic controls check - lighting the heater and allowing it to run for a short time checks these controls.

5.15.1 With Time Control (if supplied) ON, increase the Room Thermostat setting slowly until the main burner ignites.
Shortly afterwards, the fan will start to run.
When room temperature is under control, the main burner will switch off, followed shortly by the fan.
When the room temperature falls slightly, the burner will re-ignite followed by fan operation.

5.16 Safety checks

5.16.1 Check 'fail safe' operation of the multifunctional control by turning off the gas at the inlet gas cock and checking that the control fails safe (loud click heard from control) within 60 seconds.

5.16.2 Check the over-heat control by operating the heater with the main burner alight and the fan disconnected at the terminal strip on the auto transformer (ref. Fig.8) - the main burner must extinguish within 2-3 minutes.

5.16.3 Check the flue for efficient operation:-
With the heating system ON, all doors closed and any extractor fans running, use the following procedure:-
Run the appliance for twenty minutes to pre-heat the flue.
Hold a lighted taper or a smoke match in the area of the draught deflector plate in the water heater compartment.
Spillage of combustion products is indicated by displacement of the flame or smoke away from the draught diverter.

5.17 Balance the Warm Air System (refer to British System Design Manual - Gas Fired Warm Air Heating) with the Control Panel in place and the air heater having been operating for 15 minutes.

N.B. The temperature rise across the heater should be between 45°C - 55°C.
Adjust the fan speed if necessary; increase speed to reduce temperature rise, decrease speed to increase temperature.

The fan speed can be adjusted by altering the position of the tapping (black lead) to the auto transformer (ref. Fig.8).

NOTE: If the system includes ceiling diffusers, it is important that the velocities of air through these (except in very small rooms like bathrooms etc.) are at least 1.5m/s (300ft/min). To achieve this, it may be necessary to blank off part of the outlet face.

6. INSTRUCTIONS FOR USER

6.1 If the building is unoccupied, ensure that the User's Instructions are left with the appliance. Also leave these Installation Instructions with the appliance for use on future service calls.

6.2 If the building is occupied, hand over the User Instructions and make sure the user knows:

a) How to light the pilot burner

b) How to operate the Room Thermostat, set the Time Control (if supplied) and how to use the AIR HEATING, and SUMMER AIR CIRCULATION switch.
Also ensure that the User knows that after a power failure, the Time Control must be reset.

c) How to turn off the pilot burner and main burner at the gas control and switch off the electrical supply to the heater.

d) How to remove, clean and re-fit the air filter, and at what intervals i.e. fortnightly, except for new houses when it will require cleaning weekly for a short time to remove builder's dust etc..

e) How to control the heating system by opening and closing warm air outlets.

f) That the air grilles on the heater or heater compartment, or any grilles or ventilators in the walls, windows and doors of the building must not be obstructed.

g) That the heater must be serviced at least once a year by a competent person to ensure efficient and safe operation.

h) How to reset the overheat limit switch, if it is a manual reset type.

j) That the RED instructions for safe use have been pointed out and understood.

k) What to do in an emergency shutdown.

l) What to do if there is a gas escape i.e. turn off the gas, extinguish any naked flames, ventilate the area, NOT operate any electrical switches, and call the emergency service of the local Gas Authority.

7. SERVICING (all models - refer to Fig.1 for parts layout)

IMPORTANT: Before commencing any servicing or exchange of components, ALWAYS turn OFF the gas supply and ISOLATE the electrical supply.After completing any service work ALWAYS TEST FOR GAS SOUNDNESS.

7.1 Operate the appliance and check for correct function of the burner and controls.

7.2 Check the return air filter for cleanliness.

7.3.1 Remove the fan assembly (see Section 8, para.8.7), carefully clean the motor and impeller and check that the air passages within the air heater are clean.

7.4 Remove the burner assembly (see Section 8, para.8.1), inspect and clear the main burners and injectors as necessary.
Examine the burners for hairline cracks and exchange if necessary.

7.5 Inspect and clean the pilot burner and injector as necessary (see Section 8, para.8.4).

7.6 Check the condition of the thermocouple and spark electrode/leads.
Clean or replace as necessary.

7.7 Clean the heat exchanger flueways (see Section 8, para.8.12).

7.8 Reassemble and carry out the recommissioning procedure as detailed in Section 5.

7.9 Test for gas soundness and check that the appliance and controls are functioning correctly.
Finally ensure that the flue products are clearing satisfactorily with any fans in the vicinity of the appliance ON and OFF (see BS5440 Part 1).

8. REMOVAL/DISMANTLING OF COMPONENTS FOR SERVICING/REPLACEMENT

(refer to Fig.1 for parts layout)

NOTE: Following any replacement of components, the appliance should be RECOMMISSIONED.

8.1 To remove Burner Assembly (12)
With gas and electrical supplies to the appliance turned OFF,
8.1.1 Remove both front panels from the air heater.
8.1.2 Disconnect the pilot burner gas feed pipe and thermocouple connections at the multifunctional control (4).
8.1.3 Break the union fitting between the multifunctional control and the burner assembly.
8.1.4 Disconnect the igniter lead to the piezo unit (16).
8.1.5 Remove the four screws and carefully withdraw the burner assembly.
8.1.6 REFITTING is the reverse of this procedure.

8.2 Main Burner cleaning
With the burner assembly removed (see para.8.1), clean the main burners and cross-lighting bar by brushing thoroughly with a soft brush. Under no circumstances must slots or holes be enlarged, distorted or brushed strongly.

8.3 To remove Main Injector
With burner assembly removed (see para.8.1),

8.3.1 Unscrew the injectors from their housings, noting that the cross-lighting injector is a different diameter to the main injectors.

8.3.2 Clean as necessary. Under no circumstances must the hole be enlarged or distorted.
If replacing an injector, ensure that it is correctly marked (see Data Badge for details).

8.4 To remove and dismantle Pilot Burner Assembly (5) (thermocouple, pilot burner injector, burner head and spark electrode)
With burner assembly removed (see para.8.1),

8.4.1 Remove the two hexagon head screws to release the pilot burner assembly.

8.4.2 Remove the thermocouple (single screw fixing).

8.4.3 Disconnect the pilot burner gas feed pipe.
This releases both the lint arrester and the injector.

8.4.4 Disconnect the spark electrode lead and remove the screw to release the electrode.

8.4.5 REASSEMBLY is the reverse of this procedure.
IMPORTANT:-
a) DO NOT overtighten the thermocouple connection more than finger tight + 1 flat.
b) Ensure that the nozzles in the pilot burner head are correctly oriented relative to the thermocouple and cross-lighter (see Fig.5).

1 = pilot flame
2 = electrode tip
3 = thermocouple
4 = cross lighter

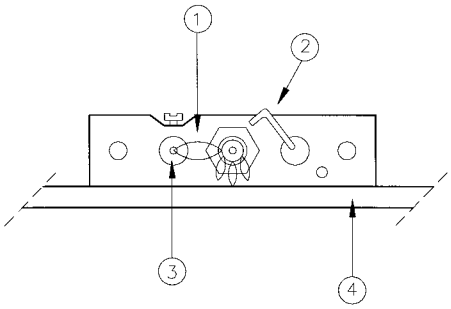

3925.tif

Fig. 5 Pilot Burner Arrangement

8.5 To remove Multifunctional Control (4)
With gas and electricity supplies disconnected and burner chamber door removed,

8.5.1 Disconnect the electrical connections to the multifunctional control, and the electrode lead from the piezo unit.

8.5.2 Break the union service cock and the union on the outlet side of the multifunctional control, ensuring that the sealing washer is retained.

8.5.3 Remove the remaining gas fittings from the multifunctional control and retain.

8.5.4 Remove the piezo unit assembly (two screws).

8.5.5 REFITTING is the reverse of this procedure.

8.6 To remove Piezo Unit (16)

8.6.1 Disconnect the electrode lead from the piezo unit.

8.6.2 Remove the piezo unit assembly (two screws) from the multifunctional control.

8.6.3 Remove the large nut to release the piezo unit.

8.6.4 REASSEMBLY is the reverse of this procedure.

8.7 To remove Air Filter (9) and Air Circulating Fan (8)
With electrical supply disconnected,

8.7.1 Remove the large front panel of the air heater (bottom panel for Upflow units, top panel for Downflow units).

8.7.2 Withdraw the filter.

IMPORTANT: On downflow models it is necessary to remove a section of internal flue pipe for access to the Air Circulating Fan. Remove the split pin from the latch on the split collar, disconnect the top section of the flue spigot by pushing the top section downwards. Remove the screw(s) securing the internal flue spigot to the flue to the flue outlet, and withdraw the internal flue spigot.

8.7.3 Undo two screws on the control box and remove the cover to gain access to the auto transformer (11).
8.7.4 Disconnect the fan connections to the auto transformer, noting their position and withdraw the fan cable.
8.7.5 Undo one screw and release the control box temporarily.
8.7.6 Downflow heaters only: Undo six screws and remove the fan compartment sealing panel.
8.7.7 Undo two screws to release the fan, then ensure that the fan cable is free, and carefully withdraw the fan.
8.7.8 Clear all dust from both impeller and motor, taking care not to disturb the balance of the fan, or replace as necessary.
8.7.9 REFITTING is in reverse of this procedure.

IMPORTANT - DOWNFLOW heaters only - special care must be taken to make a sound connection when remaking the flue after refitting the Air Circulating Fan, ensuring that the split pin is refitted into the latch on the split collar.

Note: On downflow models, ensure that the filter sections are fully engaged, such that the foam strip sits beneath the heater top cross member and forms an effective seal

8.8 To remove 240V-24V Transformer (15)

With electrical supply disconnected and burner chamber door removed,

8.8.1 Remove two screws to release the cover panel of the transformer.
8.8.2 Remove the electrical connections to the transformer and note their position.
8.8.3 Undo four screws and remove the transformer.
8.8.4 REFITTING is the reverse of this procedure.
Ensure that the washers are in place before replacing the screws.

8.9 To remove auto-transformer (11)

With electrical supply disconnected and large front panel of air heater removed,

8.9.1 Undo two screws to release the cover panel.
8.9.2 Undo the single fixing screw to release the transformer assembly.
8.9.3 Disconnect the electrical connections to the transformer, noting their position.
8.9.4 Undo four screws to release the transformer.
8.9.5 REFITTING is the reverse of this procedure.

8.10 To remove Combined Fan and Limit Switch (3)

8.10.1 Remove the screw at the top of the switch (if fitted) and remove the cover.
8.10.2 Disconnect the electrical connection to the switch, noting the colours of the wires.
8.10.3 Remove three fixing screws and withdraw the switch assembly.
8.10.4 REFITTING is the reverse of this procedure.
8.10.5 Check fan and limit switch settings (see para.5.5).

8.11 To remove Spillage switch (17)

8.11.1 Remove two screws to release the spillage switch assembly.
8.11.2 Disconnect the electrical connections to the spillage switch.
8.11.3 REFITTING is the reverse of this procedure.

8.12 Heat Exchanger cleaning

With burner assembly removed (see para.8.1),

8.12.1 Remove the heat shield from above the combustion chamber (three screws).
8.12.2 Brush the heat exchanger thoroughly from below.
8.12.3 Replace the heat shield.

9. FAULT FINDING

IMPORTANT: If an electrical fault occurs after installation of the appliance, preliminary earth continuity, polarity, and resistance to earth checks should be carried out with a multimeter. On completion of any servicing/ fault-finding task which has required the breaking and remaking of electrical connections, then checks for continuity, polarity and resistance to earth must be repeated.

NOTE: When purging or checking gas supplies, ensure that there is adequate ventilation to the room or cupboard, and that all naked lights are extinguished.

SYMPTOM		POSSIBLE CAUSE	REMEDY
(a) Pilot will not light	(I)	No gas supply to heater.	Check for gas at inlet pressure test point on multifunctional control
	(II)	Gas supply pipe not purged.	Purge gas supply pipe in accordance with BS6891.
	(III)	Pilot orifice restricted.	Clear pilot orifice carefully or replace injector
	(IV)	Piezo unit defective	Check electrode /lead /igniter.
(b) Pilot lights but goes out on releasing 'START' button during initial light-up or after normal operation	(I)	Connection between thermocouple and multi-functional control not secure	Check connection is secure
	(II)	Faulty power unit on multifunctional control	Replace multifunctional control
	(III)	Faulty thermocouple	Replace thermocouple.
	(IV)	Pilot burner flame of insufficient length.	Adjust.
	(V)	Pilot orifice restricted.	Replace pilot injector.
(c) Main burner lights but fan fails to run after approx. 3 minutes	(I)	Loose electrical connections to fan side of combined fan/limit switch or to the fan itself.	Check connections for soundness.
	(II)	Fan control settings incorrect.	Check settings.
	(III)	Faulty fan assembly.	Replace, taking care not to damage impellor
	(IV)	Faulty combined fan/limit switch.	Replace.
	(V)	Burner pressure not correct.	Adjust pressure as necessary.
(d) Main burner operating intermittently with fan running.	(I)	Gas rate or burner pressure too high.	Check gas rate and burner pressure.
	(II)	Temperature rise excessive.	Adjust fan speed or gas rate accordingly.
	(III)	Air filter or return air path restricted.	Check filter is clean and air path is clear.
	(IV)	Excessive number of outlets closed.	Open additional outlets.

(e)	Main burner operating with intermittent fan operation.	(I)	Gas rate or burner pressure too low.	Check gas rate and burner pressure.
		(II)	Fan control settings incorrect.	Check settings.
(f)	Fan runs for excessive period or operates intermittently after main burner shuts down.	(I)	Fan control settings incorrect.	Check settings.
(g)	Noisy operation	(I)	Gas pressure too high.	Check burner bar pressure.
		(II)	Noisy fan motor.	Replace fan motor.
		(III)	Fan speed setting too high.	Adjust fan speed.
(h)	Pilot alight but main burner not igniting	(I)	Mains electrical supply not connected to heater.	Check mains supply.
		(II)	Controls not calling for heat	Check that time control (if fitted) and room thermostat are operating correctly.
		(III)	500mA fuse failed	Replace. If failure occurs again, check external room thermostat leads for short to earth.
		(IV)	Loose connection on room thermostat, limit control, multifunctional control lead, time control or transformer.	Check connections for soundness.
		(V)	Transformer open circuit.	Check with test meter and replace transformer if necessary.
		(VI)	Faulty multifunctional control.	Replace multifunctional control.
		(VII)	Faulty control governor	Replace multifunctional control. Replace control if necessary.
		(IX)	Faulty room thermostat or external wiring	Fit temporary loop in heater room thermostat socket. If heater fires, external circuit or room thermostat is faulty.
		(X)	Spillage switch has operated or is faulty	Replace spillage switch.

10. TECHNICAL DATA

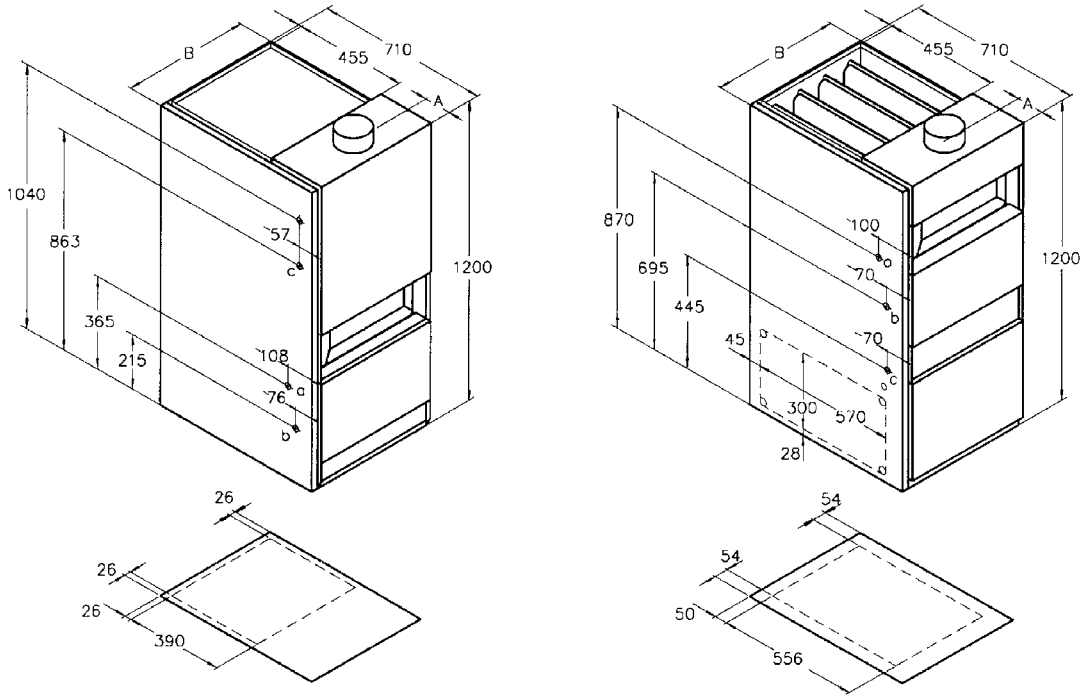

DOWNFLOW UPFLOW

a = thermostat cable entry
b = gas entry
c = main cable entry

3809.tif

Fig. 6 General Dimensions

HEATER	B-12	B-17	B-23	B-28	B-34	B-12D	B-17D	B-23D	B-28D	B-34D
Height [mm]	1200	1200	1200	1200	1200	1200	1200	1200	1200	1200
Width **B** [mm]	400	400	500	600	700	400	400	500	600	700
Depth [mm]	710	710	710	710	710	710	710	710	710	710
Weight [kg]	89	92	110	127	143	92	95	113	130	146
Heat input [kW]	15.0	22.8	30.3	37.8	45.4	15.0	22.8	30.3	37.8	45.4
Heat output [kW]	12.0	18.0	24.0	30.0	36.0	12.0	18.0	24.0	30.0	36.0
Power cons. [W]	180	230	290	450	450	180	230	290	450	450
Flue diameter [mm]	100	130	130	150	150	100	100	130	150	150
Distance of flue from front of heater **A** [mm]	107	107	107	110	110	107	107	107	110	110

Special notes:-

1. All upflow heaters (except B-12) are supplied with a twin walled oval/round flue adaptor 300mm long. Flue diameter quoted above is the diameter of the outlet of this adaptor.
2. Flue diameter for B-17 (Upflow) may be reduced to 100mm, provided that the first metre of flue is vertical.

TABLE 4

B-12 and B-12 D

	kW	MJ/h	Btu/h
Input	15.0	54.0	51,180
Output	12.0	43.2	40,940

Burner pressure : 7.5 mbar (3.0 in wg)

Main injector : 2.45 mm dia.

Cross Lighting Injector : 0.60 mm dia.

B-17 and B-17 D

	kW	MJ/h	Btu/h
Input	22.8	82.1	77,800
Output	18.0	64.8	61,420

Burner pressure : 7.5 mbar (3.0 in wg)

Main Injector : 2.45 dia.

Cross Lighting Injector : 0.70 mm dia.

B-23 and B-23 D

	kW	MJ/h	Btu/h
Input	30.3	109.3	103,380
Output	24.0	86.4	81,890

Burner pressure : 7.5 mbar (3.0 in wg)

Main injector : 2.45 mm dia.

Cross Lighting Injector : 0.80 mm dia.

B-28 and B-28 D

	kW	MJ/h	Btu/h
Input	37.8	136.1	128,970
Output	30.0	108.0	102,360

Burner pressure : 7.5 mbar (3.0 in wg)

Main Injector : 2.45 dia.

Cross Lighting Injector : 0.90 mm dia.

B-34 and B-34 D

	kW	MJ/h	Btu/h
Input	45.4	163.4	154,900
Output	36.0	129.6	122,830

Burner pressure : 7.5 mbar (3.0 in wg)

Main injector : 2.45 mm dia.

Cross Lighting Injector : 1.00 mm dia.

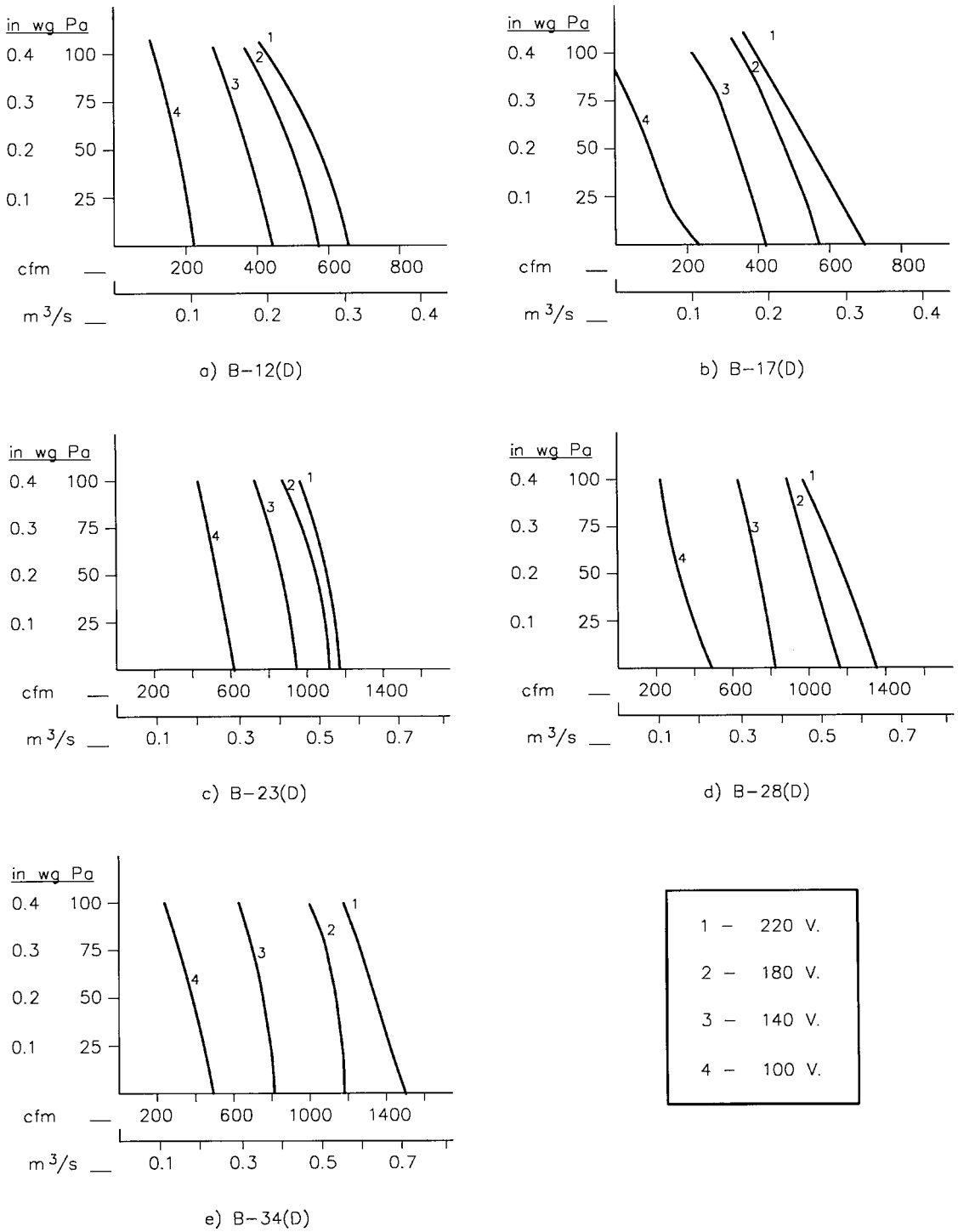

3810.tif

Fig. 7 Fan Performance Curves

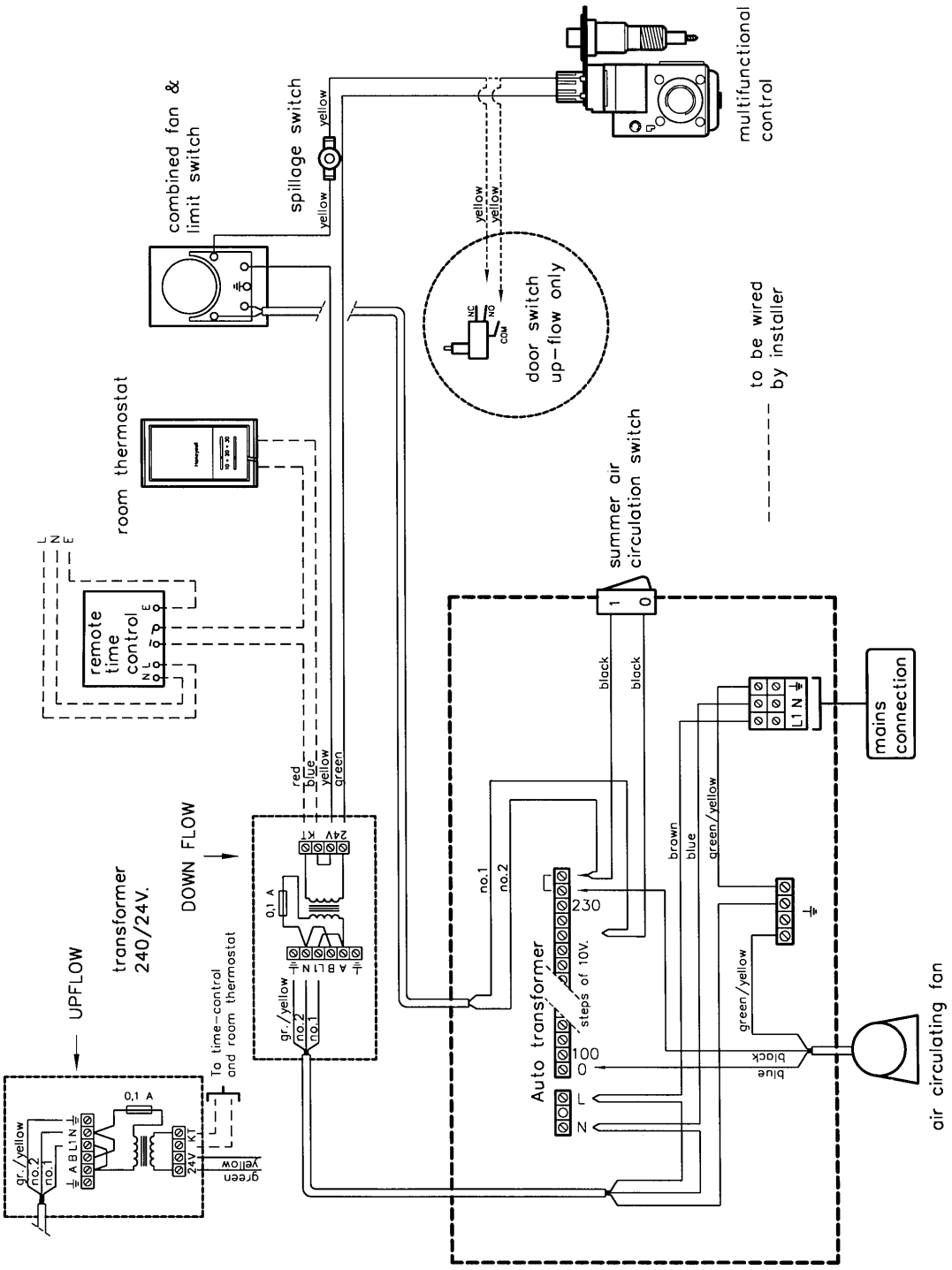

E1497.tif

Fig. 8 Circuit Diagram

11. SHORT LIST OF SPARE PARTS

G.C. NUMBER	MAKER'S NUMBER	DESCRIPTION	QTY.	B12	B17	B23	B28	B34
245 328	1000-0501535	Fan assembly.	1	X	X	-	-	-
245 329	1000-0501545	Fan assembly.	1	-	-	X	-	-
245 330	1000-0501555	Fan assembly.	1	-	-	-	X	X
245 331	1000-0510565	Capacitor 5µF	1	X	-	-	-	-
245 332	1000-0510575	Capacitor 8µF.	1	-	X	X	X	X
E39 787	1000-0013975	Filter Assembly (DOWNFLOW)	1	X	X	-	-	-
E39 798	1000-0013995	Filter Assembly (DOWNFLOW)	1	-	-	X	-	-
E39 789	1000-0013965	Filter Assembly (DOWNFLOW)	1	-	-	-	X	-
E39 790	1000-0013985	Filter Assembly (DOWNFLOW)	1	-	-	-	-	X
245 337	1000-0001255	Filter media (UPFLOW)	1	X	X	-	-	-
245 338	1000-0001265	Filter media (UPFLOW).	1	-	-	X	-	-
245 339	1000-0001275	Filter media (UPFLOW).	1	-	-	-	X	-
245 340	1000-0001285	Filter media (UPFLOW).	1	-	-	-	-	X
245 341	1000-0510505	Combined fan & limit control Honeywell.	1	X	X	X	X	X
393 412	BOS 01301	Multifunctional control Honeywell.	1	X	X	X	X	X
245 342	S 00181	Solenoid operator for BOS 01301	1	X	X	X	X	X
245 343	1000-3001505	Union washer.	1	X	X	X	X	X
245 344	1000-0703255	Pilot burner assembly.	1	X	X	X	X	X
245 345	1000-0703265	Thermocouple	1	X	X	X	X	X
245 346	1000-0703275	Burner assembly.	1	X	-	-	-	-
245 347	1000-0703285	Burner assembly.	1	-	X	-	-	-
245 348	1000-0703295	Burner assembly.	1	-	-	X	-	-
245 349	1000-0703305	Burner assembly.	1	-	-	-	X	-
245 350	1000-0703315	Burner assembly.	1	-	-	-	-	X
245 351	1000-0703355	Main injector 2.45mm dia.		2	3	4	5	6
245 352	1000-0703365	Cross-lighting injector 0.6mm dia.	1	X	-	-	-	-
245 353	1000-0703375	Cross-lighting injector 0.7mm dia.	1	-	X	-	-	-
245 354	1000-0703385	Cross-lighting injector 0.8mm dia.	1	-	-	X	-	-
245 355	1000-0703395	Cross-lighting injector 0.9mm dia.	1	-	-	-	X	-
245 356	1000-0703405	Cross-lighting injector 1.0mm dia.	1	-	-	-	-	X
245 357	1000-0703325	Piezo unit	1	X	X	X	X	X
245 358	1000-0703335	Electrode.	1	X	X	X	X	X
245 359	1000-0703345	Electrode lead.	1	X	X	X	X	X
245 360	1000-0510585	Spillage switch (TTB)	1	X	X	X	X	X
245 361	1000-0510515	Auto transformer.	1	X	X	X	X	X
245 362	1000-0510525	Transformer 240V-24V	1	X	X	X	X	X
245 363	1000-0510595	Fuse 100mA 20mm slow blow.	1	X	X	X	X	X
245 188	T822D1800	Room thermostat.	1	X	X	X	X	X

Johnson and Starley prides itself on its ability to supply spare parts quickly and efficiently. If your service engineer indicates a problem in obtaining a spare part, advise him to contact Johnson and Starley Spares Department at the address below.

610394

JOHNSON AND STARLEY LTD.,
Rhosili Road,
Brackmills,
Northampton NN4 7LZ.

Telephone: (01604) 762881
Telefax: (01604) 767408